GUIDE TO THE EVENT

for

COMPETITORS, SERVICE CREWS AND OFFICIALS

GUIDE TO THE EVENT

SECTION A - GENERAL

A1 MESSAGE FROM THE EVENT DIRECTOR
A3 EVENT SPONSORS
A3 THE TEAM BEHIND THE TRIAL
A4 SOME DO'S AND DONT'S TO OBSERVE
A5 WEATHER AND ATTIRE
A6 OVERALL SCHEDULE OF ACTIVITIES
A7 HYDRATION
A8 CAMS INSURANCE
A9 START ORDER
A10 OFFICIAL MAPS

SECTION B – THE COURSE

B1 OVERVIEW OF COURSE
B2 SUMMARY OF DISTANCES
B3 REFUEL INFORMATION

SECTION C: FUNCTIONS

C1 PRE-EVENT BRIEFING
C2 WELCOME FUNCTION
C3 START OF EVENT
C4 FINISH OF EVENT
C5 PRESENTATION FUNCTION

SECTION D: PRE-EVENT ACTIVITIES

D1 EVENT HEADQUARTERS IN FORBES
D2 COMPETITORS RELATIONS OFFICER
D3 DOCUMENTATION
D4 SCRUTINY
D5 VEHICLE ODOMETER CHECK COURSE

SECTION E: DURING-EVENT ACTIVITIES

E1 TRIAL HEADQUARTERS
E2 OFFICIAL NOTICE BOARDS
E3 MEALS
E4 ROAD BOOKS/SERVICE CREW INSTRUCTIONS
E5 ROAD CARDS
E6 INJURIES/PROPERTY DAMAGE – INCIDENT REPORT FORM
E7 GOSSIP/PUBLICITY INFORMATION FORM
E8 COURSE CREWS
E9 OVERNIGHT STOP PROCEDURES
E10 LATE TIME LIMITS
E11 REFUELLING
E12 SERVICE CREWS/SERVICING
E13 FOREGOING THE COMPETITION/WITHDRAWAL FROM THE EVENT
E14 SCORES AND RESULTS
E15 SAFETY
E16 DUST MASKS
E16 ON-BOARD CAMERAS
E18 GATES
E19 PUBLICITY
E20 MERCHANDISE

ATTACHMENTS

Map of Forbes
Frontier Serrvice Merchandise order form

GUIDE TO THE EVENT

The information set down in this document is intended as a guide to competitors, service crews and officials involved with the event. This information does not supersede the Supplementary Regulations and subsequent Bulletins and therefore cannot be used as the basis for a protest. If there is a conflict between this information and the regulations, the latter takes precedent.

SECTION A - GENERAL

A1: MESSAGE FROM THE EVENT DIRECTOR

Bob Watson's original concept for the Red Centre to Gold Coast Trial was to finish that event at the World Rally Championship Event (WRC) 12 months ago. With the postponement of the WRC last year the Red Centre to Gold Coast Trial still went ahead.

The dust had not even settled when Bob came up with the idea to run a shorter, cheaper and easier event to this year's Repco Rally Australia.

This is the third event that the organising committee of Tom Snooks, Bob Watson, Michael Browning, Phil Rainer and me has conducted.

In November 2007 we closed the Great Ocean Road to run a Porsche National event with the Event Director being Michael Browning.

Last year the Red Centre to Gold Coast event was headed by Bob Watson and now COT. All these events have been conducted under the eagle eye of Clerk of Course, Tom Snooks. The success of any event I believe is due to the organising team and we have the best.

It has been another joy to organise this trial. Although not as adventurous as the Red Centre to Gold Coast, nor has it been without its frustrations, however, meeting the property owners, state foresters and the many other country folk that have assisted us in making this event, is one of the major positives of putting it together.

Without doubt the highlight of the Classic Outback Trial will be the Super Special Stage at Murwillumbah on Friday night and the three WRC stages on Saturday. For a competitor to be in a position to compare their times against the world's best is something that not many get the opportunity to do.

I, with others in our Team, trust that you enjoy the event and that you will still want to talk to me at Tweed Heads.

Phil Bernadou

A2: EVENT SPONSORS

Naming Rights Sponsor - Frontier Services

Frontier Services is a charity and agency of the Uniting Church that grew out of the pioneering work begun in 1912 by the Rev John Flynn ('Flynn of the Inland').

Frontier Services today is the major provider of aged care, health and community services, and pastoral support to people in Outback Australia, working with people across 85 per cent of the continent in regional centres, Aboriginal communities, isolated properties and mining sites.

It is the only organisation, public or private, providing these services across the whole of remote Australia and needs to raise millions of dollars each year through donations to support provision of critical services.

Frontier Services' goal is to work with and empower communities and individuals to overcome the disadvantages of living in remote locations.

One of the organisation's recent initiatives is its Outback Links programme. Outback Links aims to reduce isolation and disadvantage in Outback Australia by linking appropriately skilled and gifted volunteers with outback people, who could use a helping hand.

Peter Lehmann – Official Wines of the Trial

Peter Lehmann Wines is one of Australia's most respected and innovative winemakers, creating wines that delight wine lovers around the globe.

Winemaking operations are carried out at a single site located near Tanunda, in the heart of the internationally famous Barossa Valley, South Australia.

Since it's founding in the Barossa Valley in 1979, Peter Lehmann Wines has cemented its place as one of Australia's most respected and innovative winemakers, and since 2003 it has been a member of the Hess Group, which also includes The Hess Collection Winery in the Napa Valley, Glen Carlou in South Africa and Bodega Colomé in Argentina.

Peter Lehmann Wines will be enjoyed exclusively at the Official Welcome function of the 2009 Frontier Services Classic Outback Trial in Forbes and at the event's Gala Presentation Dinner in Tweed.

Nissan – Official Vehicle Provider

Nissan is the Official Survey Vehicle of the 2009 Frontier Services Classic Outback Trial.

The event has relied exclusively on Nissan X-Trail diesel vehicles to pioneer and check the event's 2,260km course through widely varying terrain in Western, Central and Northern New South Wales.

Nissan has a proud off-road heritage in Australia.

In 1958, Nissan made its international motorsport debut with a two-vehicle entry in the Mobilgas Trial, while a Nissan won the 1970 Ampol Trial – one of Australia's iconic 'Round Australia' events.

Further off the beaten track, a Nissan Patrol in 1962 became the first vehicle to cross the Simpson Desert – the world's largest parallel sand dune desert.

Telstra Country wide – Official telecommunications partner

The 2008 Red Centre to Gold Coast Trial is relying on Telstra Country Wide to deliver the satellite, mobile and land-line communication services that are essential for the safe and effective running of a major motoring event in remote regions of Australia.

The unrivalled coverage offered by Telstra's Next G network makes it possible for up to date event information to be made available to participants and supporters at a speed that would have been unthinkable to the organisers of the previous 13 Round Australia trials.

Murcotts Driving Excellence

Murcotts Driving Excellence is a wholly Australian owned and operated business, established 40 years ago (in 1969) by the late Jim Murcott, motoring journalist with the aim of reducing road trauma through driver education.

In the years since, Murcotts has become Australia's leading driver management development and education company delivering quality researched based programs in all Australian states and internationally.

Important initiatives include the development of a Total Driver Management System particularly targeting workplace safety. Driving associated with work is responsible for nearly half of Australia's vehicle related road fatalities.

A major component of Murcotts business is Fleet and Driver Management services designed to assist corporate clients to effectively manage their drivers.

Murcotts programs are regularly conducted in all Australian capital cities and regional centres. International programs have been conducted in Thailand, Papua New Guinea, Fiji, New Zealand and the Philippines.

A3: THE TEAM BEHIND THE TRIAL

EXECUTIVE COMMITTEE

Promoter/Trial Director	Phil Bernadou	pora1@bigpond.net.au	0412 498 602
Clerk of Course	Tom Snooks	kemdot@iprimus.com.au	0428 165 275
	Bob Watson	bobwatso@bigpond.net.au	0427 201 158
Publicity/Promotion	Michael Browning	michael@browning.com.au	0418 324 328
Overnight Stops/Functions	Phil Rainer	prainer@bigpond.net.au	0418 517 385

HEADQUARTERS/OVERNIGHT STOPS

Clerk of Course	Tom Snooks
Assistant to Clerk of Course	Kevin Shaw
Competitor Relations Officer	tba
Results Manager	Alex Ross
Chief Scrutineer	Warren Campbell
Overnight Stop Officials/Scrutineers	Noel Claridge, Jeff Lomman
Publicist	Michael Browning
MC (Forbes Start; Presentation)	Bob Watson/Max Stahl

COURSE CREWS

Set Up Car 1	Phil Bernadou, Louise Bernadou, Alan Patterson (Checker)
Set Up Car 2	Phil Rainer, Carlie Rainer
Sweep	Jim Reddiex, Andrew Reddiex, Alex Ross, Jenny Ross
Recovery 1	Geoff Thomas, Ben Thomas

ROAD CREWS

Crew 1 D	Peter Millear, Bob Carpenter
Crew 2 A	Peter Fraser, Marg Fraser
Crew 3 D	Pat Hetherman, Sheridan Hetherman & Cailin Williamson
Crew 4 B	Ron Brown, Marcia Brown
Crew 5 C	Bill Bennett, Joan Bennett
Crew 6 A	Steve Hollowood, Chris Brown
Crew 7 B	Peter Lewis-Williams, Judi Lewis-Williams
Crew 8 C	David Johns, Sue Johns
Crew 9	Les Shadwick, Jane Shadwick

FIV TEAMS

FIV 1	Steve Gaggin, Chris Benjamin

CAMS OFFICIALS

Steward	Allan Denney (Chief)
Steward	Warren Gracie
Checker	Alan Patterson

A4: SOME DO'S AND DONT'S TO OBSERVE

DON'T speed on public roads. Keep within the speed limit and respect the applicable traffic laws. Speeding competitors are liable to incur the normal civil traffic offence penalties as well as event penalties under Supplementary Regulation Article 616.2.

DO close gates when required to do so – take notice of the 'close' or 'open' signs

DON'T ever leave an overnight stop without sufficient water.

DO show courtesy to other road users, and to locals in the area through which we pass – after all, they live there and we might want to return some day. Also, remember your car is 'marked' with decals so they know who you are.

DON'T consume alcohol during the competition, or carry firearms – you will be excluded under Supplementary Regulation Articles 114 and 115.

DO obey the instructions of the officials – this will make for the conduct of a smoother event.

DON'T litter – be tidy and put your rubbish in containers and then into an appropriate bin. Never bury your rubbish as animals will just dig it up and spread it around.

DO report any incident or accident with another vehicle, stock or property. Use the event's Incident Sheet and hand it in at the Trial Headquarters (or to the Competitor Relations Officer).

DON'T drop oil anywhere – put it in a container and dispose of it properly at the next service station or at the appropriate container at an overnight stop.

DO consult the Competitor Relations Officer for help with any problem.

A5. WEATHER AND ATTIRE

The average statistics for the weather in September as:

Location	Temperature		Rainfall	
	Max	Min	mm	No Days
Forbes	16	3	38	5
Coonabarabran	17	1	53	6
Glen Innes	14	1	47	5
Gold Coast	24	15	44	5

Remember these are averages so it could be considerably warmer or colder on the day.

The weather will be the warmest since last summer and, with the coldish nights and mornings, you need to dress accordingly. Best to have clothing that can be 'peeled off' as the day warms and put on as the evening (or morning) gets colder.

It is very important to make sure that you have suitable headgear – a wide brim hat is essential as you may have to stand in the sun without much shade if you have a car problem in some parts of the country – a cap may not be sufficient, and certainly you won't want to stand around in your safety helmet!! And make sure you have sun screen lotion amongst your kit in the car.

A6. OVERALL SCHEDULE OF ACTIVITIES (subject to change due to changing circumstances)

DAY	DATE	TIME	ACTIVITY	TOWN	LOCATION
Sat	29/8	1000-2100	Documentation (at issued report times)	Forbes	Plainsman Motel, Sherriff Street
Sat	29/8	1400-1700	Scrutiny (at allocated times)	Forbes	Jelbart Dawson Ford, Rankin Street
Sun	30/8	0800-1500	Documentation (at issued report times)	Forbes	Plainsman Motel, Sherriff Street
Sun	30/8	0900-1500	Scrutiny (at allocated times)	Forbes	Jelbart Dawson Ford, Rankin Street
Sun	30/8	1500-1630	Officials Briefing	Forbes	Plainsman Motel, Sherriff Street
Sun	30/8	1800-1830	Competitors/Service Manager Briefing	Forbes	Town Hall, Harold Street
Sun	30/8	1800	Start order, vehicle class postings	Forbes	Town Hall, Harold Street
Sun	30/8	1845-1930	Welcome Function	Forbes	Town Hall, Harold Street
Mon	31/8	0800-0830	Competitors report to start location	Forbes	Town Hall, Harold Street
Mon	31/8	0800-0900	Frontier Services Breakfast	Forbes	Town Hall, Harold Street
Mon	31/8	0900	First vehicle starts event	Forbes	Town Hall, Harold Street
Mon	31/8	1100-1400	Lunch and service	Condobolin	Showground
Mon	31/8	1335	First vehicle arrives end of Day 1	Forbes	Showgrounds, off Camp Street
Tue	1/9	0700-0800	Frontier Services Breakfast	Forbes	Showgrounds, off Camp Street
Tue	1/9	0800	First vehicle starts Day 2	Forbes	Showgrounds, off Camp Street
Tue	1/9	1135-1430	Lunch and service	Burdenda	Shearing Shed
Tue	1/9	1645	First vehicle arrives end of Day 2	Coonabarabran	Showground, off Newell Highway
Wed	1/9	0800-0900	Frontier Services Breakfast	Coonabarabran	Showground, off Newell Highway
Wed	1/9	0800	First vehicle starts Day 3	Coonabarabran	Showground, off Newell Highway
Wed	1/9	1330	First vehicle arrives end of Day 3	Coonabarabran	Pillaga Pottery, north of Coonabarabran
Thu	2/9	0800	First vehicle starts Day 4	Coonabarabran	Showground, off Newell Highway
Thu	2/9	0830-1000	Breakfast after first competitive section	Elah	Elah Homestead
Thu	2/9	1230-1500	Lunch and service	Barraba	Bowling Club
Thu	2/9	1645	First vehicle arrives end of Day 4	Glen Innes	Showground, off New England Highway
Thu	3/9	2000-2100	Partial Provisional Results posted	Glen Innes	HQ – New England Motor Lodge
Fri	4/9	0700-0800	Frontier Services Breakfast	Glen Innes	Showground, off New England Highway
Fri	4/9	0800	First vehicle starts Day 5	Glen Innes	Showground, off New England Highway
Fri	4/9	1550	First vehicle arrives	Tweed Heads	Jack Evans Boat Harbour Car Park
Fri	4/9	1800	First vehicle leaves for Murwillumbah	Tweed Heads	Jack Evans Boat Harbour Car Park
Fri	4/9	2015	Repco Rally Australia Super SS	Murwillumbah	TBA
Fri	4/9	2045	First vehicle ends Day 5	Tweed Heads	Jack Evans Boat Harbour Car Park
Sat	5/9	0700-0800	Frontier Services Breakfast	Tweed Heads	Jack Evans Boat Harbour Car Park
Sat	5/9	0745	First vehicle starts Day 6	Tweed Heads	Jack Evans Boat Harbour Car Park
Sat	5/9	1040-1330	Lunch and service	Kyogle	St Brigids Catholic School – Main Street
Sat	5/9	1400	First vehicle arrives end of Day 6; Finish	Kingscliff	Murphy Street
Sat	5/9	1530	Vehicles leave	Kingscliff	Murphy Street
Sat	5/9	1600	Vehicles arrive	Tweed Heads	Not specified
Sat	5/9	1630	Provisional Results posted	Tweed Heads	HQ – Tweed Ultima
Sat	5/9	1900-2300	Presentation Function	Tweed Heads	Tweed Ultima Function Centre

A7. HYDRATION

Geoff Becker and Graham McGrath of MotorSport Safety & Rescue Pty Ltd have provided this article on maintaining hydration.

Did you know that a loss of fluid, equal to 2% of body mass is sufficient to cause significant decrease in performance and increases the risk of symptoms such as nausea, vomiting, diahorrea and other GIT symptoms?

Typically athletes, in high intensity exercise in hot conditions, can lose 2 -3 litres per hour. In some of the hot rallies in Asia there have been examples of crews losing up to 4 kilos each per day. Once lost, it is very difficult to reverse. As a general rule we should be aiming to keep fluid loss to less than 1kg

Maintaining hydration can be achieved by adopting a planned approach during the event, by drinking plenty of suitable fluids. We recommend that for every litre of water consumed, you follow-up with a 500ml electrolyte drink - *it is important to find an electrolyte drink that you find palatable.*

There are two simple ways of ensuring that you are drinking enough and they are:

- If your urine is clear *(this is a reliable indicator of sufficient fluid intake)*
- You should urinate several times a day
- If practical, weigh yourself at the start and the finish of each day to check on any weigh loss.

The FIA Institute of Motor Sport Safety recommends avoiding:

- Aerated Drinks
- Large quantities of fruits
- Large amount of confectionery
- Alcohol *(proven as a diuretic and will increase fluid loss)*
- Foods which are difficult to digest; melon, cucumber, cabbage, onion, spices, rich, or fried foods.

The Institute recommends:

- Non – aerated water
- Fruit juice
- Energy drinks
- Sugars absorbed slowly (pasta, rice, bread)
- Dried fruit

*A note on coffee – the consumption of caffeine has now **NOT** been proven to impact on dehydration.*

As a means of early identification drivers, navigators and service crew should take notice of each others' mental and physical wellbeing, subtle changes can be an early indicator of the onset of dehydration.

Treatment

Avoid becoming dehydrated. Cases of dehydration require 150% of fluid loss to be replaced over a 2-6 hour period - this is not easy to achieve during the event.

A8. CAMS INSURANCE

Refer to SR205. Remember:

- The property damage excess payable by a competitor is $1,200.
- Up to 5 additional units of personal accident insurance are available to all crew members. For details see the CAMS website.

A9. START ORDER

Day 1

The start order for Day 1 will be posted on the Official Notice Board at 1800 on Sunday 30 August. Vehicles will leave the start in Forbes at one minute intervals, and then start the first competitive section at two minutes intervals.

Posting of Start Order During Event

Re-start times will be posted progressively during the processing of the road cards, and the progressive start order for the following Day will be posted after about 30 road cards have been scored.

This progressive list will provide an indication of the *approximate* starting time the next day. Naturally, these times are subject to change as later competitors arrive and results are tallied. Nevertheless, it gives a good idea of the approximate start order so competitors can retire for the night without waiting for the final print out.

Upon completion of processing, the final start order will be posted on the Official Notice Board and it is a good practice to always re-check the start order first thing in the morning and make sure you allow plenty of time to re-start at your correct time

A10. OFFICIAL MAPS

The official maps, to be issued at documentation in Forbes, are:

NRMA Map 5 – Central and North West covering Cowra to Tenterfield and New England
NRMA Map 6 – Far North Coast covering Woolgoolga to Tweed Heads, Gold Coast and SE Queensland
NRMA Map 7 – Murray, Riverina and Far West – covering Riverina and Tibooburra to Murray River

SECTION B – THE COURSE

B1: OVERVIEW OF COURSE

Day 1: Monday 31 August Forbes – Forbes
Originally designed as a nice easy shakedown to sort out man and beast has been redesigned by mother nature into a "not so easy" shake down! The first forest section has suffered from rain erosion that will cause problems unless care and patience is exercised. The second forest section is fast and easier on the car, but again care needs to be exercised. Kangaroos and emus abound. You will look forward to the service and lunch which will be well deserved. The last section of the day travels through three adjoining properties with three distinct terrains. This section has a bit of everything. If you have not prepared the car properly it will show up today and plenty of time has been allowed to carry out any necessary repairs.

Day 2: Tuesday 1 September Forbes – Coonabarabran
A nice easy and fast section to clear away the cobwebs. A few gates have been placed to keep the average speeds down. The first service of the day is alongside the "Utes in the Paddock" and plenty of time has been allocated so you can enjoy the display. Then back into a state forest at Tottenham before a service and lunch break at the Burdenda property north of Tottenham. The Burdenda 36km section has again a bit of everything. Starts off fast then through some grassy paddocks and a 15km run along the Bogan River which takes you around wheat paddocks and on some overgrown tracks. We then transport through Gilgandra to the last forest section of the day. This is a learner's introduction to the term HUMPS. Please learn the lesson well as it will pay off big time later in the event.

Day 3: Wednesday 2 September Coonabarabran - Coonabarabran
Possibly the most competitive day of the event with a mixture of "special" farm tracks then a state forest blast followed by the 58km Pilliga stage. I should pause here and explain that again nature has had a big say in the state of the "roads" (I use the term loosely) as bush fires ravished the area four years ago and the regrowth has been – inspirational. An upper body massage for the driver ,especially around the shoulders, will be on the bill tonight. Before you get to the pizzas and refreshments at the end of the day a great section awaits - aptly named 'Humps' - 55 in all that is a real test for the shockers! The day ends at Pilliga Pottery and I have written much about this special place in previous newsletters. I am sure you will enjoy the experience.

Day 4: Thursday 3 September Coonabarabran – Glen Innes
What a way to start the day. A 15 minute transport followed by a 6km blast to a Frontier Services breakfast. Our host, Steve is quite a character. He is the type of guy you need with you when your car breaks down. Steve could fix anything. You will see the fruits of his efforts with a display of restored WWII vehicles and old tractors. After the last car arrives you rerun the section in reverse. The next two competitive sections are in the Leard Forest, north east of Boggabri. The first section needs to be approached with caution with some steep climbs and descents but it does get better. After service another tight run around the forest. Lunch is served at the Barraba Bowling Club then a transport run to Glen Innes.

Day 5: Friday 4 September Glen Innes – Tweed Heads
The longest drive of the event, just over 500km in total, however, there is a great 48km shire road east of Tenterfield that WILL keep your attention. After passing through a service and the town of Tenterfield another section of forest road awaits. It starts out a bit rough due to the recent rains but the majority of it is very enjoyable. Another service then the scenic drive to Tweed Heads. After checking into your accommodation it's off to Murwillimbah for the first of the WRC stages. The Super Special Stage, although only 2.75km long, should be one of the highlights of the event.

Day 6: Saturday 5 September Tweed Heads – Tweed Heads
The earliest morning start with a great drive down the volcanic valley to the next WRC stage. The three sections have been recently graded which will make the runs very fast. Lynches and Eden will have been "swept" by the WRC cars, but for the last stage 9Hillyards) you will be sweeping it for them. We have a long lunch/service at Kyogle waiting for the last stage to be set up. Lots of spectators, lots of fun. Enjoy.

Summary of Schedule Start/Finish Times – First Vehicle (subject to change at any time):
(Note: 'Finish Time' is without late running and includes refuelling at the end of the Day)

Day	Day	From	Time	To	Time
1	Mon	Forbes	0900	Forbes	1335
2	Tue	Forbes	0800	Coonabarabran	1705
3	Wed	Coonabarabran	0800	Pillaga Pottery	1330
4	Thu	Coonabarabran	0800	Glen Innes	1645
5	Fri	Glen Innes	0800	Tweed Heads	1535*
6	Sat	Tweed Heads	0745	Kingscliff	1400**

**leaving Tweed Heads at 1730 for the Rally Australia Super Special Stage and Murwillumbah Returning at 2100.*
***leaving Kingscliff at approx 1600 and arriving at Tweed Heads at 1630.*

B2: SUMMARY OF DISTANCES

Day	No. of Comp Secs	Transport	Competitive	Total	% Comp
1	3	200	80	280	28.6
2	4	453	79	532	14.8
3	4	237	118	355	33.2
4	4	435	42	477	8.8
5	3	413	72	485	14.8
6	3	264	46	310	14.8
Total	**21**	**2002**	**437**	**2439**	**17.9**

B3: REFUEL INFORMATION

Day	Refuel 1		Refuel 2		Refuel 3		To Finish		Day Distances		
	Total	Comp	Total	Comp	Total	Comp	Total	Comp	Total	Comp	Trans
1	154	33					125	46	280	79	201
2	75#	14	139	11	206	36	112	18	532	79	453
3	141#	26					238	92	379	118	262
4	196#	32	103	10			178	0	477	42	435
5	214	47					262	23	476	70	406
5	68	2	This is the run from Tweed Heads to Murwillumbah for Super Special Stage and return; this needs to be taken into account to the next refuel						68	2	66
6	178*	37					130	9	310	46	264

 # this refuel is optional using service crews
**this distance does NOT include the 68km round trip Tweed Heads – Murwillumbah – Tweed Heads*

SPECIAL NOTE FOR DAY 3
There is no official refuel location on this Day. A service break will be available after 141km and then it is 238km to the end of the Day where fuel is available. Therefore, crews need to arrange for their service crews to carry sufficient fuel. If a crew does not have a service crew and requires assistance from the organisers, this must be advised to the organisers at Documentation, and suitable arrangements will be made.

SECTION C: FUNCTIONS

C1: PRE-EVENT BRIEFING

The official competitor Pre-event Briefing will be conducted as follows:
Sunday 30 August
1800 – 1830 hours
Forbes Town Hall
Cnr Newell Highway and Harold Street
All competitors are required to attend, and must sign-on on arrival. Competitors are reminded of the penalty for failure to attend (SR119). Service Crew members may attend.

C2. WELCOME FUNCTION

The Welcome Function, courtesy of the Forbes Shire Council, will be conducted as follows:
Sunday 30 August
1845 – 1945 hours
Forbes Town Hall
Cnr Newell Highway and Harold Street
All competitors, service crews and officials are invited to attend the Welcome Function. There will be no entry fee. Dress – neat casual.

C3. START OF EVENT

The start of the event will be as follows:
Monday 31 August
0900 hour for first vehicle, other vehicles leave at one minute intervals
Forbes Town Hall
Assembly in Harold Street
Details on time of reporting to the start assembly area and the start procedure will be issued at Documentation. The start order will be posted at 1800 hours on Sunday 30 August.

C4. FINISH OF EVENT

The finish of the event will be as follows:
Repco Rally Australia Service Park
Murphys Road
Chinderah
First vehicle is due at the finish at 1400, with remaining vehicles arriving at one minute intervals. On arrival the vehicles will be placed in impound (SR602.2(2)) and competitors will have until ten minutes after the last vehicle arrives to lodge any protest under SR112.2 or against any competitor. Note that this period does not cover results, refer to SR112.5.

At approximately 1530, or as determined by the Clerk of Course, vehicles will be freed to transport to Tweed Heads.

C5. PRESENTATION FUNCTION

The Presentation Function will be conducted as follows:
Saturday 5 September
1900 (pre-dinner drinks) for a 1930 start with a 2300 finish.
Tweed Ultima Apartments Function Centre
Ground Floor
20 Stuart Street
Tweed Heads

Tickets to function:
A ticket for each competitor is included in the event entry fee; the procedure for obtaining the ticket and advising of competitors presence or otherwise at the function will be issued at Documentation. Extra tickets are available at $75 (includes a three course meal and all drinks except spirits) for service crews, friends and family of competitors. These may be ordered at any time (refer to 'Order Form for Functions Competitors & Service Crews' under 'forms' on the event's website. The latest time for ordering extra tickets is 2000 on Tuesday 1 September at the event headquarters. The evening will be one solely dedicated to competitors and officials, with no *other* entertainment provided.

SECTION D: PRE-EVENT ACTIVITIES

D1. EVENT HEADQUARTERS IN FORBES

The Event Headquarters will be located as follows:
The Plainsman Motel
22 Sheriff Street
(02) 6852 2466

The Headquarters will officially be open as follows:

Day	Open From	Closed
Sat	1000	2000
Sun	0800	2000
Mon	0800	2200
Tue	0730	0900

Contact details:

Clerk of Course	Tom Snooks	0428 165 275
Assistant to Clerk of Course	Kevin Shaw	0406 407 408

Location		Open	Close
Forbes	Saturday 29th	1000	2000
	Sunday 30th	0800	2000
	Monday 31st	0800	2200
	Tuesday 1st	0730	0930
Coonabarbaran	Tuesday 1st	1500	2200
	Wednesday 2nd	0730	2200
	Thursday 3rd	0730	0900
Glen Innes	Thursday 3rd	1500	2200
	Friday 4th	0730	0930
Tweed Heads	Friday 4th	1400	2200
	Saturday 5th	0715	1900
	Sunday 6th	1000	1100

D2. COMPETITORS RELATIONS OFFICER

The Competitor Relations Officer (CRO) will be basically located as follows:

Saturday	around HQ/documentation/scrutiny
Sunday	at scrutiny (at the 'Welcome Table')
	at the Welcome Function
Monday & each day	at the start of each Day; and at end of each Day control/HQ after that
Saturday	at the Tweed Heads HQ from1700

The CRO available to be contacted on any issue affecting competitors and will deal with the issues and refer to the Clerk of Course (and other senior officials) as necessary. This line of communications allows senior officials to get on with running the event instead of answering questions. However, this does not remove the right for a competitor to seek discussion with the Clerk of Course.

D3. DOCUMENTATION

Documentation will take place as follows:

The Plainsman Motel
22 Sheriff Street
(02) 6852 2466

Competitors must report to documentation PRIOR to reporting to scrutiny, and at the time specified in Bulletin 2. Competitors are reminded of the penalty for reporting late for documentation (SR501.2). At documentation crew members are required to:

(1) Pay any monies outstanding.
(2) Ensure that the entry form has been signed by all crew members.
(3) Present CAMS Competition Licences for the competitor and all crew members.
(4) Present civil driving licences of crew members who will be driving.
(5) Provide proof of ownership (and permission to enter the vehicle if a member of the crew is not the bona-fide owner).
(6) Present the vehicle registration document.
(7) Present proof of third party insurance for the vehicle (if this is not issued in conjunction with the vehicle registration document).
(8) Present an "extension" of the "Compulsory Third Party Insurance Policy for Sporting Activities" for vehicles registered in Qld.
(9) Be issued with crew personal identification ('wrist bands' and 'swingers'), merchandise and vehicle decals.
(10) Finalise service crew registration.
(11) Advise if assistance is required for refuelling on Day 3 (see B3 above).
(12) Medical Questionnaire for FIV Crew
(13) Frontier Services Breakfast Order

D4. SCRUTINY

Pre-event

Report times for Pre-event Scrutiny will be issued at Documentation, and will take place as follows:

Jelbart Dawson Ford
Cnr Lachlan Street (Newell Highway) and Rankin Street
Forbes
Sat: 1400 to 1700
Sun: 0900 to 1500

Competitors are reminded of penalties for late arrival (SR502.2). Pre-event scrutiny of vehicles will be of a general nature:

- Check of vehicle make and model;
- Engine and chassis numbers agree with those shown on the certificate of registration or permit;
- Apparent conformity of the vehicle to the technical description document and the vehicle category for which it was entered;
- The presence of mandatory safety and emergency items;
- Apparent mechanical reliability;
- Correct placement of organisers decals on the vehicle;
- Acceptable standard of appearance of the vehicle.
- Present a CAMS Vehicle Log Book.

Any vehicle not conforming with the scrutiny or technical regulations, and which is not corrected, or appropriately re-classified, will be denied permission to start the event.

During-event

Vehicles will be checked by scrutineers immediately after booking in at the end of each Day and any issues requiring attention must be addressed and approved by the scrutineers before the crew can start the next Day.

D5. VEHICLE ODOMETER CHECK COURSE

A 5.00km odometer check course has been set by the organisers Forbes, using GPS. This was checked and used during the CAMS course check.

South on Newell Highway from Forbes
0.00 110km/h de-restriction zone sign
5.00 COT marker

Signs showing 'Start ODO' and 'Finish ODO' will be erected by 1000 hours on Saturday 29 August. The check can be used in reverse. See attached Forbes map for location of the check course.

SECTION E: DURING-EVENT ACTIVITIES

E1: TRIAL HEADQUARTERS

Headquarters will be located as follows.

Day	Town	HQ	Address
Mon 31/8	Forbes	Plainsman Motor Inn	Sherriff Street
Tue 1/9	Coonabrabran	El Paso Motel	Newell Highway
Wed 2/9	Coonabrabran	El Paso Motel	Newell Highway
Thu 3/9	Glen Innes	New England Motor Lodge	New England Highway
Fri 4/9	Tweed Heads	Tweed Ultima	20 Stuart Street
Sat 5/9	Tweed Heads	Tweed Ultima	20 Stuart Street

During the day on Tuesday, Thursday and Friday HQ will not be manned as HQ staff will be travelling from one overnight stop to the next.

E2: OFFICIAL NOTICE BOARDS

Official Notice Boards will be located at all the HQ listed in E2. It is the competitor's responsibility to check the notice board for any information that may be issued by the organisers. An Official Notice Board will also be established on the events website. Times, penalties, results and the start order for next Day will be posted on these boards each night.

E3: MEALS

Breakfasts

Frontier Services will be providing a breakfast service as follows:

Monday 31St Forbes
Tuesday 1st Forbes
Wednesday 2nd Coonabrabran
Thursday 3rd Coonabarabran – at Elah Homestead after the first competitive section
Friday 4th Glen Innes
Saturday 5th Tweed Heads

Have your breakfast delivered to you or collect it in the morning – the choice is yours! By purchasing these convenient, healthy and satisfying breakfast options, you will be supporting Frontier Services' Outback Links project and many remote families and communities. So … sustain yourself and Outback Links at the same time! You can even pre-purchase breakfast for the entire Trial and we will deliver them to you!

Your Breakfast Options:

The Jump Start $8

Includes: Cereal and milk (choice of Cornflakes, NutriGrain & Light N Tasty)
Berri Multi V Orange juice
Goulburn Valley Two Fruits Diced
Wheelies Cookies
Bowl, serviette, spoon & sugar portions included

This pack can be delivered to your motel the evening prior or collected at the start line in the morning.

The Shock Absorber $11

Includes: Cereal and milk (choice of Cornflakes, NutriGrain & Light N Tasty)
Berri Multi V Orange juice
Goulburn Valley Two Fruits Diced
Wheelies Cookies
Bowl, serviette, spoon & sugar portions included

Plus a delicious Egg and bacon roll – cooked fresh by your Outback Links volunteers at the start line!

Coffee and tea will be provided at the start area each morning plus water; drinks, fresh fruit and snacks will be available for purchase each morning!

If you have any special dietary requirements, please write these on the order form or call Davida on 0428 958 529.

Please return this form with your order (see attached) to the Frontier Services team at the Welcome Function, or at the end of each days competition!

Lunches

Lunchbreaks are organised throughout the day except on Day 3 (Wednesday) when the course loops from and back to Coonabarabran and no suitable locations are visited. Crews will need to make their own arrangements on this day – there will be two service areas. This Day finishes quite early (1330 first vehicle) at the Pillaga Pottery, 20km north of Coonabrabran and substantial food will be available here

Dinners

It needs to be appreciated that in country towns restaurants/cafes often close around 2000.

E4: ROAD BOOKS/SERVICE CREW INSTRUCTIONS

Road Books

Road books will be issued as follows:

- Day 1 – between 1500 and 1730 on Sunday 30 August at the event's HQ
- Days 2, 3, 4, and 5 – on arrival at the end of the Day and after the vehicle passes scrutiny
- Day 6 – on arrival at Tweed Heads before travelling to Murwillumbah for the Super Special Stage

The structure of the road book will be:

- Sponsors page
- Day Map of course
- Page with Day descriptions, Day distances, refuel schedule, contact telephone numbers
- Itinerary page
- Page of abbreviations used
- Tulip information page
- Town map of town leaving (if applicable)
- Route instructions
    - rating of difficulty of competitive section (highest degree of difficulty = 5)
    - distance
    - time allowed for section
    - convention route charts, including refuel and mealbreak information
    - GPS (Global Positioning System) coordinates of all competitive controls are listed
- Competitive section map, with description
- Town map of town entering
- Sketch of compound/servicing/parc ferme area
- End of Day procedure
- Incident, Gossip, Withdrawal/Foregoing the Competition Forms
- Spare road card

You MUST check your road book upon receiving it – all the pages are numbered, which makes for easy checking. If you have an incomplete road book see the CRO.

Service Crew Instructions

The event's service crew instructions will be listed in one book, and this book will be issued with the road books on Sunday 30 August between 1500 and 1800. One set of instructions is issued as part of the entry fee, extra service registration is available for $50 per set.

E5: ROAD CARDS

A road card will be issued with the road book for each Day and it is the competitor's responsibility to look after the card and hand it in at the end of the Day. If the road card is left behind at a control there is no need to turn back for it. Just continue and spare road card in the road book, or Incident Report Form, for officials to record times at controls. If a road card is lost, do the same thing. There is no penalty for losing a card – the only penalty being that the times cannot be computed until the control cards arrive at the end of the Day with the Sweep vehicle. So, please do take care of your card and try to prevent dust from getting on it as it is then difficult to write on.

E6: INJURIES/PROPERTY DAMAGE – INCIDENT REPORT FORM

Competitors are required (under SR 617) to report all incidents involving a member of the public, injury to a competitor, official or spectator, and any damage to a vehicle. Reports are to be made using the official 'Incident Report Form' located in the back of the road book (and available from HQ and the CRO). These forms are to be handed to the CRO or into HQ; or given to an official if the former is not possible.

E7: GOSSIP/PUBLICITY INFORMATION FORM

A 'Gossip/Publicity Information' form will be located in the rear of the road book and you are invited to report any incidents that you see or hear of that may be of interest to the event's publicist.

E8: COURSE CREWS

Section Set Up Crew

Control crews will man the start and finish of each competitive section. There are ten such crews and they will travel round the course carrying out their specific tasks, and will be fully briefed in their duties and issued with relevant manuals. They will arrive at the start of a section no later than three hours before the first competitor is due, and the crew manning the section finish control will drive through the section and set up advisory signs for competitors and erect any road closure materials. On arrival at the end of the section the control/set up crew declares that section 'yellow', meaning it is set up but not ready for competition. After the last competitor and then 'sweep car' have passed through the start control, the officials manning the start will travel through the section and collect all signs and road closure materials.

Section Check Car (two cars)

This car will carry the Deputy Clerk of Course who has set the course, as well as the CAMS Course Checker who checked the course with the Deputy in July, when they agreed with how the course is to be set up, with direction signs, caution signs, road closures (manned or with bunting/notice). They will pass through about an hour before the first competitor and will check the set up of the signs and officials and 'seal' the road by placing the road closure materials in place. On arrival at the end of the section the crew declare the section 'green', thus indicating it is ready for competition.

Sweep Car Crew

Travelling immediately behind the last competitor a 'sweep crew' travels through the course and collects all paperwork, closes controls and re-opens any closed road. When this crew reaches the finish of each competitive section it declares the section to be 'black', which means the competition is over.

Recovery Crew

A recovery vehicle crews travel behind the field and provide assistance to any crew requiring it. The recovery crews are not obliged to repair cars or two them, although they may do so at their discretion.

First Intervention Vehicle (FIV) Crew

An FIV manned by a doctor and a paramedic will accompany the event.

E9: OVERNIGHT STOP PROCEDURES

The following is an extract from a road book:

ARRIVAL

Booking into the final control. There is no penalty for booking in early, but you will be penalised if you are late (one min/min). The control official will keep your road card and any forms you wish to hand in.

Scrutiny

Immediately after booking in, scrutineers will look over the vehicle. If all is in order a 'Ready to Start Day' sticker will be placed on the vehicle; if there are any defects these will be advised to you and must be rectified and passed by the scrutineers before you can start the next Day.

Competitor Relations Officer

The Competitor Relations Officer will be located at the arrival location.

Road Book and Service Crew Instructions for Next Day (SR601.1)

These will be issued once you have passed scrutiny. If you are very late and the control is unmanned, the books will be available at HQ.

Impound Area/Parc Ferme

After the above procedures, other than at the end of Day Six, when vehicles will be placed in an impound at the finish at Kingscliff, crews are free to take their vehicle wherever they wish.

Reports/Claims/Protest

If you have any reports to lodge or claims to make these MUST be lodged with the Competitor Relations Officer, or with HQ, **WITHIN TWO HOURS** of your booking in at the end of the last transport section, or 10 minutes after the last vehicle arrives at Kingscliff on Day Six.

- Enquiry on any alleged mistake, irregularity or action on the course for today (SR112.2)
- Report on overtaking (SR612.5)
- Refund of compassionate time (SR618 – read this before lodging a claim!!)
- Any accident of any type which results in injury; or damage to another vehicle or property or stock – an Incident Sheet MUST be lodged with the organisers.

E10: LATE TIME LIMITS

Late time limits are advised in Bulletin 2.

E11: REFUELLING

Refer to B3 above for the refuel schedule.

E12: SERVICE CREWS/SERVICING

Service Crews

Service Crews are required to be registered with the organisers and the registration form is available on the event's website. The first registration fee is included in the entry fee, additional crews cost $50.

Service crew instructions, briefing document and service vehicle decals will be issued at Documentation in Forbes.

All service crew members may attend the briefing

Service crew members are invited, at no charge, to the Welcome Function.

The entry fee included invitation of the crew members to the presentation function. Tickets will be needed by service crews and these will cost $75; They may be purchased at Documentation in Forbes, and at any event HQ until 1900 on Tuesday 1 September. No guarantee of tickets can be offered b y the organisers after this date due to catering numbers having to be advised to the function caterers.

E13: FOREGOING THE COMPETITION/WITHDRAWAL FROM THE EVENT (SR619)

Competitors are reminded of procedures outlined in SR619.

E14: SCORES AND RESULTS

Study the regs for definitions

Scores (SR802)

Scores (times and penalties) will be calculated as soon as possible and posted on the Official Notice Board at HQ. When a number have been processed (say 30) the scores will be placed on the website. Any enquiry can be lodged with the Competitor Relations Officer.

Results

Days 1 to 4 (copy from Bulletin 1)

Partial Provisional Results will be adopted and will be published at Glen Innes after the end of Day 4 (Thursday 3 September). These will be posted on the official results notice board and will cover Day 1 (start) to Day 4 (arrival at Glen Innes)

- Posted between 2000 and 2100 (if unable to post at this time a notice will be placed on the notice board indicated a new posting time);
- If posted by 2100 competitors have up to 2200 to lodge any protest

Once the above protest times have passed no protest can be lodged at a later time.

Days 5 and 6

Days 5 and 6 provisional results will be posted at the HQ at Tweed Ultima at 1630 and will become final results one hour later if no protests are received. This means that crews need to study the provisional results immediately on arrival from Kingscliff.

Competitors are reminded that any protests about any mistake, irregularity or action to the prejudice of the competitor must be lodged within two hours of arrival at the end of the Day, or on Day 6 within 10 minutes of the last vehicle arriving at the finish, in which such mistake, irregularity or prejudice occurred. These type of protests CANNOT be lodged in conjunction with the posting of provisional results

E15: SAFETY DOCUMENT FOR COMPETITORS

Motorsport Safety Rescue is providing the Safety Team, comprising a 'First Intervention Vehicle' (FIV) and two medical staff (doctor and paramedics, both experienced in rallies and outback events) have been established to provide coverage specifically for the competitive sections. On transport sections, the team will assist at accidents, but these are primarily the responsibility of the various state emergency services. All medical services in the vicinity of the route will be advised of the passage of the event

A Safety Document will be issued with the Day 1 road book in Forbes.

E16: DUST MASKS

Don't forget to include dust masks in your kit.

E17: ON BOARD CAMERAS

This was not covered in the supplementary regulations. However scrutineers will be checking that any camera is safely mounted, using the following criteria.

Cameras and video recorders may be fitted to vehicles. Where the camera and recorder are combined into a unit (Camcorder) the unit must only be fitted to the rollover protection structure or other substantial part of the bodyshell of the vehicle. It must be mounted inside a safety cradle which fits closely around the body of the unit. The camcorder shall be held in place by a strap held tight by means of self locking fasteners. The strap and cradle may be lightly padded. The cradle shall be constructed as shown in Diagram (X) below and held to the rollover protection by means of a metal clamp and at least two 6mm class 8.8 bolts. Rollover protection type padding is to be placed on the outside of the box/carrier.

Where the camera is a small separate unit (ie a 'lip stick' lens), it need not be fitted inside the cradle described above, but the recorder shall be mounted in the luggage compartment, or where this is impractical (eg. hatchback vehicles), it shall be mounted inside a box made from aluminium of a minimum thickness of 5mm, held down by at least three 6mm diameter class 8.8 bolts. This mounting of any on-board camera shall be inspected and approved by the Chief Scrutineer.

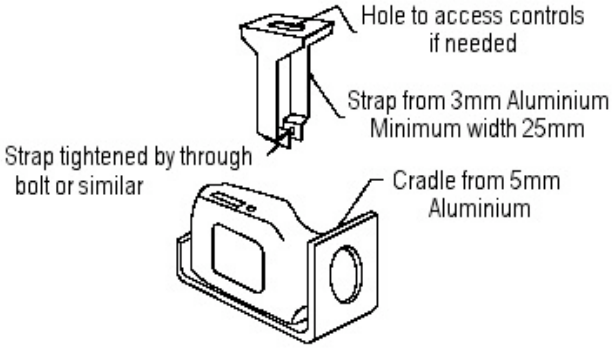

Diagram X

Competitors are reminded of SR203.8 and SR401.7

E18: GATES

Gate Marking.

All gates to be passed through during the event will be marked by a 20cm x 15cm (half A4 size) marker attached to a gatepost (not the gate itself). These will be put in place by the set up officials and removed by the recovery car. All gates will be called up in the road book together with an instruction **"leave closed"** (green) or **"leave open"** (red). Failure to comply with these instructions will result in a penalty under regulation 603.5.2. The marker will be demonstrated at the crew briefing.

The route instruction tulip lists all gates, and shows the way the gates are to be opened (towards or away) and on which side (left or right).

A yellow board with a black 'G' will be placed on the right hand side of the road 100m prior to a gate to advise drivers that a gate is ahead. However, drivers must not totally rely on this board being in place.

Gates on Transport Sections.

There are not a lot of these and they will not be marked. They will remain as found, and need to be opened and closed by competitors as required.

E19: PUBLICITY

Entrants, support crews, supporters, sponsors, the media and the public will be kept informed about the progress of the event and its winners and losers via the publicity service operated by the event's Publicity and Promotions Manager Michael Browning, in conjunction with the event's Results and Photographic team.

Results from each Day will be posted on the event's website as soon as they are available while they will be joined by photographs of daily starts and special stage action by photographs taken by the Trial's official photographer, James Elliott.

Photographs of special media interest will be posted in high resolution on the Trial's Media section of the website, where they can be accessed alongside regular articles covering the progress of the Trial, compiled by Michael Browning.

Entrants are encouraged to complete the 'gossip' forms issued with their Roadbooks to record any amusing, interesting or unusual aspects of their travels so that they can be shared with fellow competitors. These forms will be forwarded to the Publicity Manager for inclusion in event reports, keeping them interesting and lively for those following the Trial in the press or on the web.

E20: MERCHANDISE

Don't forget the Frontier Services merchandise. See the attached order form.

ORDERS MUST BE LODGED BY FRIDAY 28TH AUGUST

CLOTHING ORDER FORM

Clothing for the Classic Outback Trial has been supplied by Frontier Services. Please support Frontier Services by purchasing caps and additional clothing items.

Clothing orders will be available for collection at Documentation.

All competitors and officials will receive one polo shirt free of charge, courtesy of Frontier Services.

Please note that sizes are unisex – size 8 & 10 women is a small, size 12 is medium etc. Shirt sizes available are small to 3XL.

Sizes are limited but all effort will be made to fulfil your requirements.

Item	Cost	Size required	Number	Total Cost
Souvenir caps	$12 each	Universal		
Competitors shirts	$25 each			
Officials shirts	$25 each			
1 x competitors shirt	No charge		1	$0.00
1 x Officials shirt	No charge		1	$0.00
			Total:	

Payment Information:

Name: _____

Address: _____

Contact Number: _____

Total payable: $ _____

☐ **Cash**

☐ **Cheque** *(cheque made payable to Frontier Services)*

☐ **Credit Card** ☐Visa ☐MasterCard

My card number __ __ __ __ / __ __ __ __ / __ __ __ __ / __ __ __ __

Cardholder's Name _____ Expiry Date ____ / ____

Signature _____

Please return completed forms to:
Frontier Services, GPO Box 2527, Sydney NSW 2001
or email to kiri.d@frontierservices.org
or fax 02 8270 1313 by August 28th.